Transmitters for Pt-100, Resistors

Transducers for all resistive sensors (e.g. Pt-100). Versions with fixed range or programmable range, with or without galvanic isolation.

General Description

These transducers convert the resistance of a resistive sensor (e.g., Pt-100/1000) to a temperature or resistance dependant linear signal (e.g., 0-10 V or 4-20 mA). Either fixed range or programmable range versions are available. The measurement range and zero-point (offset) of the programmable transducers are selected by DIL-switches in steps of 10° or 10 Ohm using simple binary codes (10, 20, 40, ...). Various operating modes can also be selected via DIL-switches (2-, 3-, or 4-wire connection, voltage or current output). All settings are calibrated.

- With optional galvanic isolation of input and output and/or power supply, 1kV test voltage.
- Linearization for Pt-100/1000 and Ni-sensors
- Fixed-range types: Input and output ranges selectable as desired, factory calibrated
- Programmable types: all ranges and settings can be selected via DIL-switches

Overview

Modules for DIN-Rails	Type	Output	Supply	Range	Features
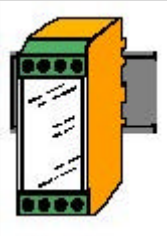	**RTM 70/71**	V	21-32V/±15V	fixed	Voltage output
	RTM 82/83	0/4-20mA	21-32V	fixed	Current output
	RTM 90-P/R	V, 0/4-20mA	19-32V	progr.	Programmable via DIL switches
	RTM 80/81	4-20mA	2-D, 13-32V	fixed	4-20 mA 2-wire connection
	RTM 100-P/R	4-20mA	2-D, 13-32V	progr.	Programmable via DIL switches
	ISOR 70/71	V/Iso.	21-32V/ ±15V	fixed	Voltage output
Dimensions: 55x60x23mm	**ISOR 90-P/R**	V/Iso.	19-32V	progr.	Programmable via DIL switches
	ISOR 80/81	4-20mA/ Iso.	2-D, 13.5-32V	fixed	4-20 mA 2-wire connection
	ISOR 100-P/R	4-20mA/ Iso.	2-D, 13.5-32V	progr.	Programmable via DIL switches

Modules for printed circuits	Type	Output	Supply	Range	Features
	SIGR 10/11	V	14-32V/ ±15V	fixed	Voltage output
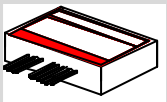	**SIGR 32/33**	0/4-20mA	2-D, 14-32V	fixed	Current output
	SIGR 15-P/R	V, 0/4-20mA	16-32V	progr.	Programmable via DIL switches
	SIGR 30/31	4-20mA	2-D, 9-32V	fixed	4-20 mA 2-wire connection
	SIGR 35-P/R	4-20mA	2-D, 10-32V	progr.	Programmable via DIL switches
Dimensions: 55x32x15mm	**ISOR 10/11**	V/Iso.	14-32V/ ±15V	fixed	Voltage output
	ISOR 30/31	4-20mA/ Iso.	2-D, 10-32V	fixed	4-20 mA 2-wire connection

Iso.: with galvanic insolation between in- and output, 2-D: 4-20mA 2-wire technology (supply and signal on same wire)

Modules for printed circuits	Type	Output	Supply	Range	Features
	**RTM 10/11**	V	14-30V/±15V	fixed	Voltage output
	RTM 30/31	4-20mA	2-D, 12-30V	fixed	4-20 mA 2-wire connection
Dimensions: 30x30x15mm or 30x20x15mm	**RTM 32/33**	0/4-20mA	14-30V	fixed	Current output
	RTM 60	V	±15V	fixed	Very accurate, true diff. amplifier

- **Transmitters for DIN heads: consult distributor or factory, specs see RTM 80/81**
- **Odd type numbers: for 3-wire connection (e.g. RTM 71), even type number for 2- or 4-wire connection (e.g. RTM 70).**
- **Programmable types: extension –P for Pt-100, -R1 for resistors up to 1.27 kOhm, -R2 for resistors up to 12.7 kOhm**

Technical Data

Specifications for accuracy classes A, C, und D (Max. values at 23°C, unless otherwise stated)

General	A	C	D	Unit
Conversion error (linearity)[1]	0.01	0.02	0.04	%
Calibration error (factory calibrated, only fixed ranges)	0.03	0.05	0.1	%
3 dB-Bandwidth, typ.[3]	5	5	5	Hz
Influence of wire resistance (Pt-100), 4-L	0.002	0.004	0.001	%/Ohm
Influence of supply voltage[1]	0.005	0.01	0.02	%/V
Linearization error Pt-100[2]:	**A**	**C**	**D**	**Units**
Measuring range < 300° (progr.: 200°)	0.02	0.03	0.05	%
Measuring range < 600° (progr.: 400°)	0.05	0.07	0.1	%
Output	**A**	**C**	**D**	**Unit**
Output impedance, voltage, typ.[3]	50	50	50	Ohm
Output current (voltage output), max.	5	5	5	mA
Burden, current output, min.[3]	400	400	400	Ohm
Offset stability regarding:	**A**	**C**	**D**	**Units**
Temperature[1]	1	5	15	µV/K
Ageing, 1 year[1]	5	10		µV
Ageing, 10 years[1]	20	40		µV
Gain stability regarding:	**A**	**C**	**D**	**Units**
Temperature[1]	30	70	150	ppm/K
Ageing, 1 year[1]	400	800		ppm
Ageing, 10 years[1]	1200	2500		ppm

[1] The typical error is two to four times smaller than the quoted max. error.
[2] These data are only valid for zero points greater than -80°C. The exact value of the error depends on the measurement range.
[3] Lower cut-off frequencies for small ranges. Different frequencies can be delivered if required.

Temperature range °C: recommended: 0/60 °C functional: -20/90 °C

Note

The errors quoted are only valid for a measurement range where the start of the range (zero-point or offset) is not more than 50% of the range end (e.g. 20 to 100 Ohm).
If the zero-point is shifted considerably (e.g. measurement range of 400 to 500 Ohm), then the quoted error refers to the range calculated to have begun at zero (0 to 500 Ohm).
Sensor current: typ. 0.5-1 mA (D: 2 mA) for Pt-100; for resistors 10 µA to 2 mA, according to type. Special low current versions (down to uA), e.g. for low temperature sensing down to liquid helium temperatures, available on request.

Dimensions and Connections

DIN-Rail Module

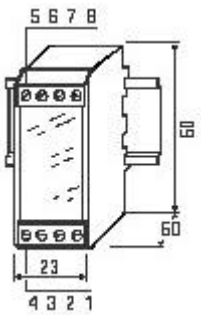

Printed Circuit Module

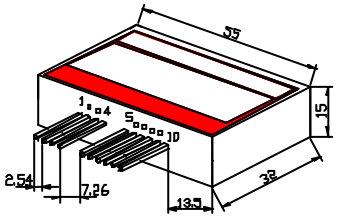

DIL – Range Switches

DIN-Rail Module

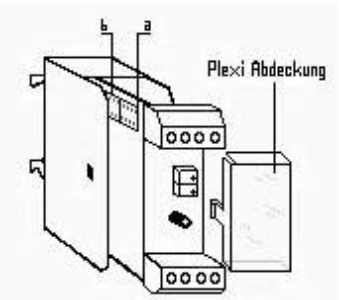

Printed Circuits Module

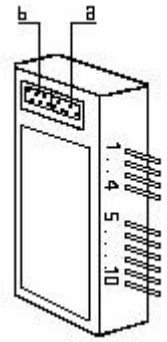

Programmable Modules

Input

Pt-100: 2-, 3- or 4-wire connection, sensor current 0.5-1mA (A,C-Type), max. 2 mA D-Type. **All ranges** can be realized, also for Pt-500/1000, Ni-, Cu-Sensors and for all resistors and potentiometers up to 100 kOhm.

Special versions with extremely small sensor currents for low temperature sensing.

Overvoltage protection up to 30 VDC, surge/burst protection up to 3 kV.

Input Ranges (programmable versions)

Measuring range (span): selection in steps of 10° or 10 Ohm (max. 640°/1260 Ohm), version R2: in steps of 100 Ohm (max. 12.7 kOhm). The range must be between -100/540°C resp. 0/1300 Ohm (13 kOhm for R2). Intermediate values are adjusted with a potentiometer.

Offset: selection in steps of 10° or 20 Ohm, from -100 to 150°C (Pt-100-Typ) resp. in steps of 20 Ohm from 0-300 Ohm (R1-Typ), R2 in steps of 200 Ohm from 0-3000 Ohm.

Modules for other sensors (e.g. Pt-1000) are also available.

Other settings (programmable versions)

Input: 2-, 3- or 4-wire connection of sensor.

Output: Selectable between -5 and 10 V (e.g. 0-10 V) or between 0 and 20 mA (e.g. 4-20 mA). Negative output voltages do not need a negative power supply (internal DC-DC-converter, not isolated). A negative output voltage is not available for ISOR 90.

Output

Voltage Output: Output impedance typ. 50 Ohm, max. 5 mA output current. Standard between 0 und 10 V, on request also negative values (down to –10 V, a negative power supply or the optional DC-DC-converter must be used for fixed range modules). The output is short circuit proof and protected against overvoltages (up to 30 VDC). The technical data (specs) are valid for the current output; the voltage output is usually slightly more accurate and stable (no voltage-to-current conversion).

Min. output voltage with unipolar power supply (fixed range modules): approx. 10 mV. Using the optional DC-DC-converter (without galvanic insulation) one can obtain also exactly 0 mV.

Current Output: Burden min. 400 Ohm. Standard 0-20 mA or 4-20 mA, short circuit proof and protected against overvoltages. Other output ranges on request.

Option: Frequency output (max. 20 kHz), for more info, see „Analog to Frequency transducers“.

Power Supply

All modules are suited for unregulated, noisy industrial power supplies; nominal value is 24 VDC (min. 19 V, max. 32 V). Other supply voltages on request (e.g. 15 V). Current consumption without load is between 3 and 15 mA. AC power supply on request.

Negative outputs (down to –10 V) do not require a negative power supply (built in DC-DC-converter) in case of programmable modules.

Accuracy (programmable versions)

The transducers are delivered with the following setting: 0-200°C/Ohm, 4-wire, 0-10 V output, 0.1% calibration error. The calibration error is approx. 0.1% when switching to another range (max. 0.3% for span and offset). ISOR-types can show a greater error using certain ranges.

Options

DC-DC converter (integrated in the DIN-rail module) for galvanic isolation of the power supply, 1 kV test voltage (3 kV available on request).

Programmable limit switch (integrated in the DIN-rail module), 2.8 mm flat connectors on the side (for built in relay) for monitoring and control.

Frequencies output (max. 20 kHz), galvanically isolated, see "Analog to Frequency transducers " for more information.

Other versions (ranges, inputs, outputs, time behaviour/filters, noise) and special versions

When ordering, please specify:

Module type, sensor type (e.g. Pt-100)

Accuracy class (A, C or D)

Input range (in °C or K or Ohm) and **output range** (in V or mA, in Hz for frequency output) for fixed range modules or if a special adjustment prior to delivery is required

Programmable versions: please specify input type (Pt-100, R1 from 0-1270 Ohm, R2 from 0- 12.7 kOhm)

Power supply (24 V standard, 15 V or ±15 V on request).

Other designs (ranges, inputs, outputs, time behaviour/filters, noise) and special versions.

Block Diagram and Connections, 23 mm DIN-Rail Modules

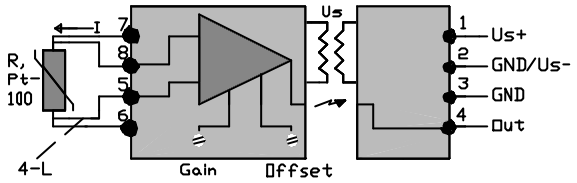

ISOR 70-100; RTM 70-100

Modules with no isolation (RTM70-90) do not have the isolation barrier shown in the figure

Connection of supply, 4-20mA 2-wire-modules Module (RTM80,100, ISOR80,100): see below

Terminal 1: Pos. supply, 24 VDC nominal
Terminal 2: Ground supply or neg. supply
Terminal 3: Signal ground and power ground with neg. supply
Terminal 4: Signal out (plus)

Terminal 5: Input (minus), open with 3-wire-connection of sensor
Terminal 6: Ground and current source (sink)
Terminal 7: Current source (plus)
Terminal 8. Input (plus), with potentiometers: tap

2L-connection: external short circuit between 5-6 and 7-8
3L-connection: terminal 5 not connected

Please note: A 3-wire connection can't be realized with a 4-wire module and vice versa. Only programmable modules offer both input modes.

Block Diagram and Connections, Modules for Printed Circuit Boards

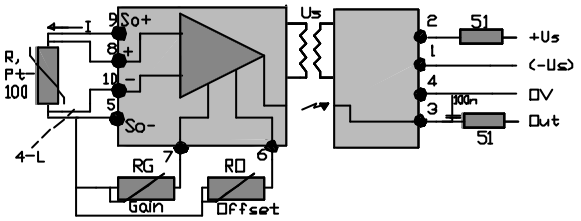

ISOR10-35, SIGR10-35

External Potentiometer: 1KOhm each, adjustment range approx. 5%

Modules with no isolation (RTM10-60, SIGR10-35) do not have the isolation barrier shown in the figure
Connection of supply, 4-20mA 2-wire-modules (SIGR30/35, ISOR30): see below

Terminal 1: Ground supply or neg. supply
Terminal 2: Pos. supply, 24 VDC nominal
Terminal 3: Signal out (plus)
Terminal 4: Signal ground and power ground with neg. supply

Terminal 5: Ground and current source (sink)
Terminal 6: Offset-potentiometer, nominal 1kOhm
Terminal 7: Gain-potentiometer, nominal 1kOhm
Terminal 8: Input (plus), with potentiometers: tap
Terminal 9: Current source (plus)
Terminal 10: Input (minus), open with 3-wire-connection of sensor

2L-connection: external short circuit between 5-10 and 9-8
3L-connection: terminal 10 not connected

Filter (2x51 Ohm, 1x100nF) to be used in case of HF-interferences

Please note: A 3-wire connection can't be realized with a 4-wire module and vice versa. Only programmable modules offer both input modes.

Connecting a potentiometer to a module

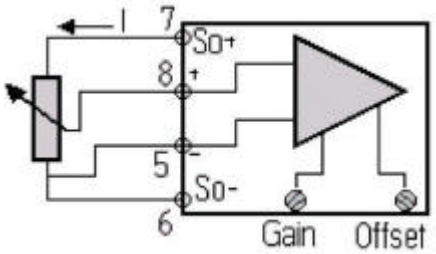

The diagram opposite shows how to connect a potentiometer to an RTM DIN rail module. When using a potentiometer as a voltage divider we recommend using an RTM module. As is the case for any normal resistor, the current sources (So+, So-) should be connected to both ends of the potentiometer. The "+" input is connected to the tap. The advantage of a current source over a voltage source is that any voltage drops in the wires, plugs, etc., have no effect.

For a printed circuit board module, the following applies: So+: 9, "+"-input: 8, "-"-input: 10, So-: 5.

Connection of Power Supply and Output of a 4-20 mA module

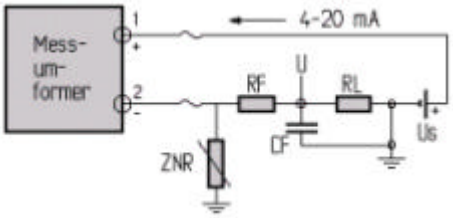

DIN-rail module RTM 80,100, ISOR80, 100.
Exchange 1 and 2 with printed circuit modules (SIGR30, ISOR30)
Connection 3,4: leave open

Terminal 1: Pos. power supply
Terminal 2: Neg. power supply, 4-20 mA output

The resistor RL converts the current (4-20 mA) to a voltage signal, U. Where HF interference cannot be excluded, it is recommended that a filter (CF and RF) be installed in front of the shunt resistor (RL). RF is typically approx. 100 Ohm and CF 100 nF up to several mF. Such a filter is generally required (usually together with an overvoltage arrester, e.g., a ZNR) in order to fulfil EC-EMC standards.

Exchange terminals 1 and 2 with printed circuit modules

Adjustment of Measurement Range and Zero Point

The modules with a fixed measurement range are precisely calibrated at the factory (error usually less than 0.05%), further calibration is generally unnecessary. If the output values are not correct, first of all check the connections, the power supply (is the supply voltage correct ?), the experimental arrangement and all instruments in use.
We recommend that when working with programmable or configurable modules, the calibration should be checked after each new adjustment.
Adjustment is performed using a calibrator or a calibrated sensing device. The zero point (offset) is adjusted via the "Offs" potentiometer and the full scale value is adjusted via the "gain" potentiometer. The zero point is adjusted first and then the full scale. Where large adjustments are necessary, the procedure should be carried out several times.
For additional reliability, the output value should be measured at half the measurement range (linearity test).
The output voltage of modules with a unipolar supply voltage can’t reach exactly 0 mV. In such cases, zero point adjustment must be performed with an input value which produces a non-zero output value.

Programming of XXXX90 und XXXX100 (DIL Range Switches)

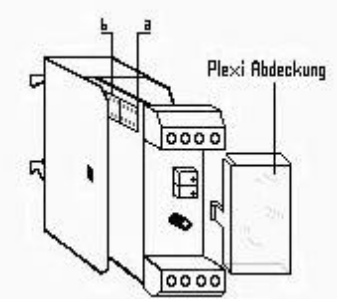

DIN-rail Module

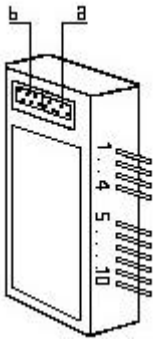

Printed Circuit Module

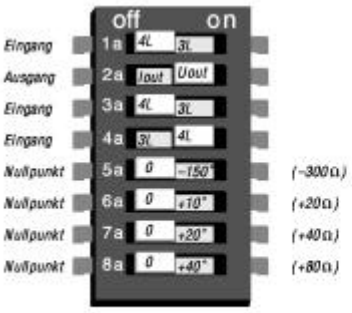

a

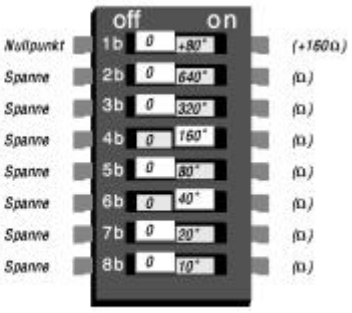

b

Input: Eingang; Output: Ausgang; Nullpunkt: Zero point; Span: Spanne

DIL-Switches

The programming switches 1a to 8a and 1b to 8b are located inside the module. Carefully remove the plexiglas cover. The printed circuit board can now be removed by pulling gently on the screw terminals. A binary code is used for the setting of zero point (offset) and span: the desired values are the sum of the corresponding switches. All values in the table below are valid for a standard output of 0-10 V or 0-20mA (RTM90) or 4-20mA (RTM100, ISOR100).

Switch a

Switch	Function	off	on	on R1
1a	Input	4-L	3-L	
2a	Output	Iout	Uout	
3a	Input	4-L	3-L	
4a	Input	3-L	4-L	
5a	Offset	0	-150°C	-300 ?
6a	Offset	0	+10°C	+20 ?
7a	Offset	0	+20°C	+40 ?
8a	Offset	0	+40°C	+80 ?

Switch b

Switch	Function	off	on	on R1
1b	Offset	0	+80°C	+160 ?
2b	Span	0	+640°C	+640 ?
3b	Span	0	+320°C	+320 ?
4b	Span	0	+160°C	+160 ?
5b	Span	0	+80°C	+80 ?
6b	Span	0	+40°C	+40 ?
7b	Span	0	+20°C	+20 ?
8b	Span	0	+10°C	+10 ?

Option R2: all values x 10.

Please note: modules RTM100, ISOR90, ISOR100 and RTM35: switch 2a always off.

The setting can also be done using the following formula. Replace the switch designator (6a, 7a, ...) with 1 (if „on“) or with 0 (if „off“).

Offset = -150°x5a + 10°x6a +20°x7a + 40°x8a + 80°x1b — **offset, °C for Pt-100**

Offset = -300? x5a + 20? x6a +40? x7a + 80? x8a + 160? x1b — **offset in Ohm for resistors (R1)**

Span = 10x8b + 20x7b + 40x6b + 80x5b +160x4b + 320x3b+640x2b — **span in °C or Ohm (R1)**

Example: 50°-400°C = 0-10 V. The offset is 50°C, the span 350°C
Setting of offset: 6a and 8a „on“, together 10° + 40° = +50°C
Setting of span: 3b, 7b and 8b “on”, together 320° + 20° + 10° = 350°C

Other output voltages or currents:

The values in the table are for an output of 0-10 V or 0/4-20 mA. For other output values (e.g. 0-50° = 0-2 V), one must calculate the corresponding span for 0-10V: In the example (0-50° = 0-2 V) the corresponding range is 0-250° = 0-10 V. With this setting, one gets automatically 0-50° = 0-2 V.

Rule: Always calculate first the range for a standard output (0-10V/0-20mA XXXX90) or 4-20mA XXXX100).

Important note:

Soclair Electronics is continually working to improve the quality and reliability of its products. MTBF (using MIL217) is well above 10 years (in most cases even more than 100 years). Nevertheless, electronic devices in general can malfunction or fail due to their inherent physical and chemical properties. It is the responsibility of the buyer, when utilizing Soclair Electronic products, to observe standards of safety and to avoid a situation in which a malfunction or failure of a Soclair Electronic device could cause loss of human life, injuries or damage to properties. Soclair Electronic products are not authorized for use in life support systems.